Magnetic Floating Display

Key Stage: 1

Strand:

Mathematics: Measures (Learning Unit: 3M5 Weight)

General Studies: Science and Technology in Everyday Life

Objectives:

(i) To measure and compare the weights of objects using 'gram'(g)

(ii) To nurture the habit of doing estimation before measuring

(iii) To recognise some examples of forces

(iv) To design and make artifacts with daily materials

Prerequisite Knowledge:

(i) Recognise the concept of weight

(ii) Compare the weights of objects directly

(iii) Measure and compare the weights of objects using improvised units

(iv) Understand the need for using standard units

Resources Required: Beads (of 1 gram each), 2 pieces of magnet, circular cardboard, a base, polymer clay (or other materials), electronic balance

Description of the Activity:

Setting

The teacher shows different magnetic floating displays and asks students why the floating displays can float in the air. The teacher may propose students to make some floating displays and give the floating displays to their relatives or friends to show their concern.

Activity 1

The teacher guides students to conduct an experiment by using beads. The students need to find out the numbers of beads to make the two magnets just connect together.

(Figure 1)

➔

(Figure 2)

Process of the activity:

1. Put the two magnets around the column of the base with the same pole are facing each other. (Figure 1 and Figure 2)
2. Put the cardboard on top of the two magnets. (Figure 3)

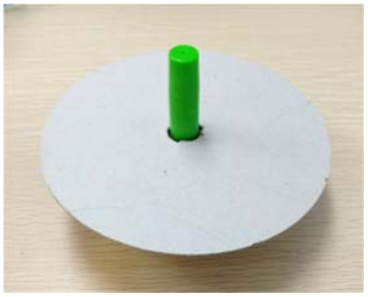

(Figure 3)

3. The students find out the numbers of beads to make the two magnets just connecting together and record the results on the worksheet.

Questions for discussion:

1. How do we use our fingers to make the two magnets with the same pole facing each other to connect together? (Figure 1 and Figure 2)
2. Guess how many beads can make the two magnets connecting together? Write the guessing and experiment results on the worksheet.

Notes for Teachers:

1. The base may be designed by 3D drawing software (Figure 4). It can be made by 3D printing or other methods. The file of the base is named as “object01” in both stl and obj formats for download. The teacher may use 3D printer to print the base directly, or revise the design by using 3D drawing software so that it can fit the size of the magnets.
2. The teacher may remind students to count the beads in groups of two, five and ten.

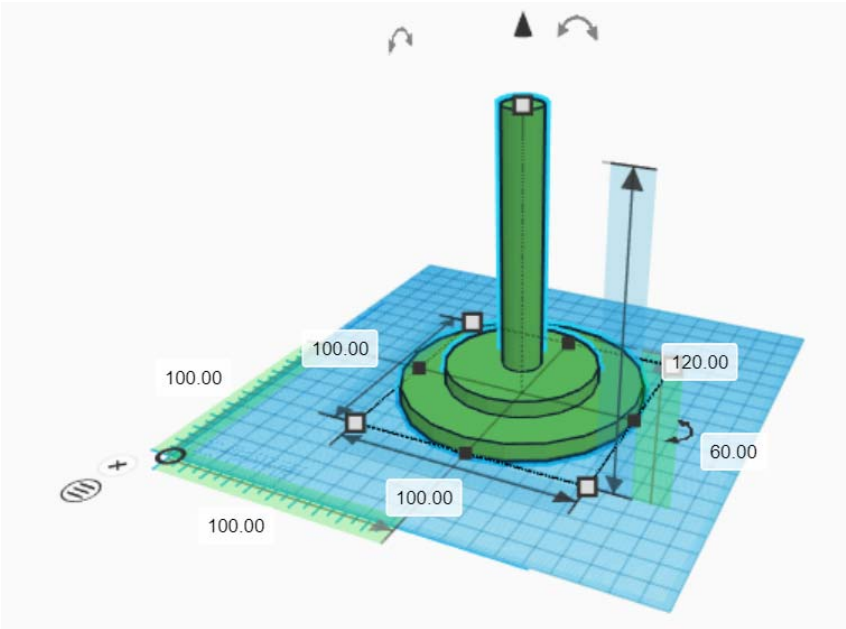

(Figure 4)

<u>Activity 2</u>

The teacher lets the students make the floating objects by using polymer clays of the weight corresponding the result in Activity 1 (Figure 5).

(Figure 5)

Question for discussion:

To make the floating object floating on the magnet of the base, should the weight of it be larger, smaller or equal to that in Activity 1?

Notes for Teachers:

1. To avoid skin allergy, the teacher can remind the students to wear gloves when touching polymer clay.
2. The teacher may use 3D drawing software and 3D printer to make different types of plastic plates to hold the polymer clays for making the floating displays (Figure 6 and Figure 7). The file of the plate is named as “object02” in both stl and obj formats for

download. The teacher may use 3D printer to print the base directly, or revise the design by using 3D drawing software.

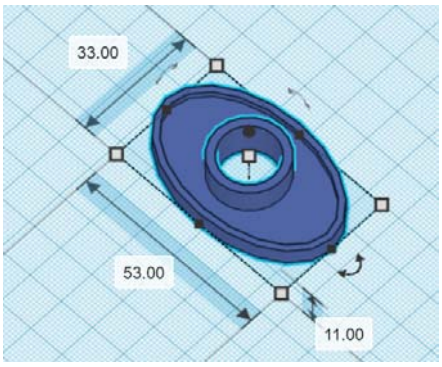

(Figure 6)

(Figure 7)

This example mainly involves the following generic skills:

1. Mathematical Skills
   - Find out the total number of beads by counting

2. Creativity
   - Use creativity and imagination by taking part in artistic creation.

3. Problem-solving Skills
   - Propose different ways to estimate/count to improve the counting technique.

Worksheet

Estimate the number of beads to be put on the cardboard to make the 2 magnets are connecting together.

1. My first estimation is: _____beads are needed.

I use the following steps to verify my estimation:

2. I put the beads on the cardboard based on the number I estimate.

3. Discuss with the classmates what the next step is according to
   - if the magnets below the cardbard connect together;
   - if the magnets below the cardbard do not connect together; and
   - if the magnets below the cardbard just connect together.

4. Repeat or finish the experiment according to different situations.
   My second estimation is: _____beads are needed.
   Repeat the steps 2 - 3.

5. The experiment can be repeated if it cannot be finished in the second trial.
   Record the results in the area below if necessary until the experiment is finished.

Results:

_____ beads are needed to force the cardboard downwards so that the magnets connect together. That is, a weight of _____ grams is just enough to force the cardboard downward.